Cine Follow Focus One

C1241-0001

User Guide

⚠Caution

- DO NOT hang heavy items over the handwheel.
- DO NOT attempt to move the camera by pulling on the Cine Follow Focus One handwheel.
- AVOID over tightening the drive gear onto the lens focus drive.
- ALWAYS use genuine Oconnor parts and accessories with the Cine Follow Focus One.
- ALWAYS dismantle when not in use and before transporting.
- Never use solvents to clean the Cine Follow Focus One. Wipe clean with a damp cloth.

Specifications

Drive ratio	35:19 (1:1:842)
Rod system compatibility	studio 15 mm/19 mm
Positioning of Driver Gear	Swing Arm, Dovetail slide
Module Coupling Systems	Backlash-Free
Driver Gear Coupling	standard serrated star
Maximum lens diameter	Ø182 mm
Weight of unit (main bridge, studio rod & 1 handwheel)	0.830 kg
Weight of handwheel	0.330 kg
Overall dimensions	280 mm x 140 mm x 130 mm

Specifications are subject to change without notice

Contents

Caution 1
Specifications. 2
Components 4
In the Box. 5
Drive gears 7
Assembly 8
repositioning the lock levers 9
mounting the swing arm and drive gear 10
mounting the handwheel 11
mounting onto the camera rods 12
engaging the drive gear 13
marking disks 14
witness mark 15
Dismounting. 17
Storage 18
OConnor Offices 19

Components

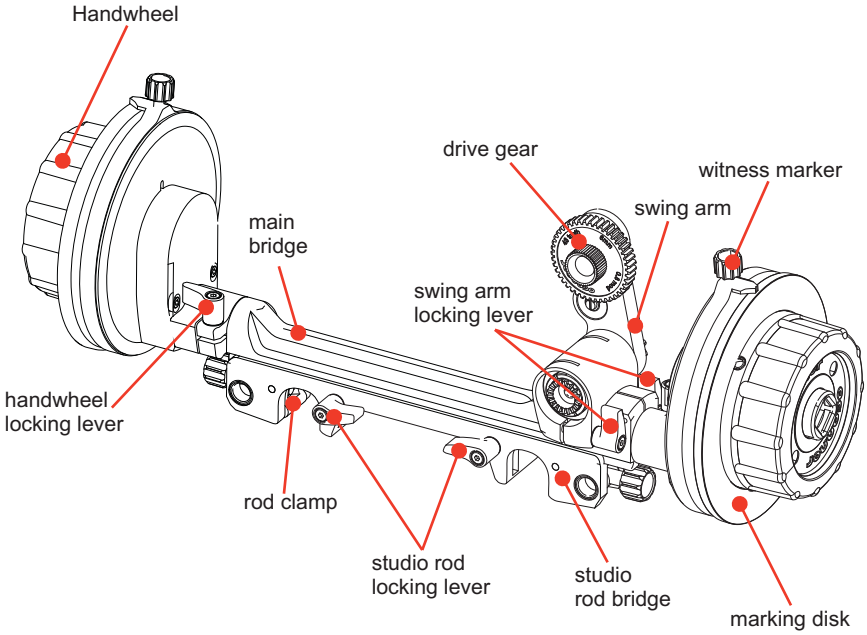
Handwheel
drive gear
witness marker
swing arm
main
bridge
swing arm
locking lever
handwheel
locking lever
rod clamp
studio rod
locking lever
studio
rod bridge
marking disk

In the box

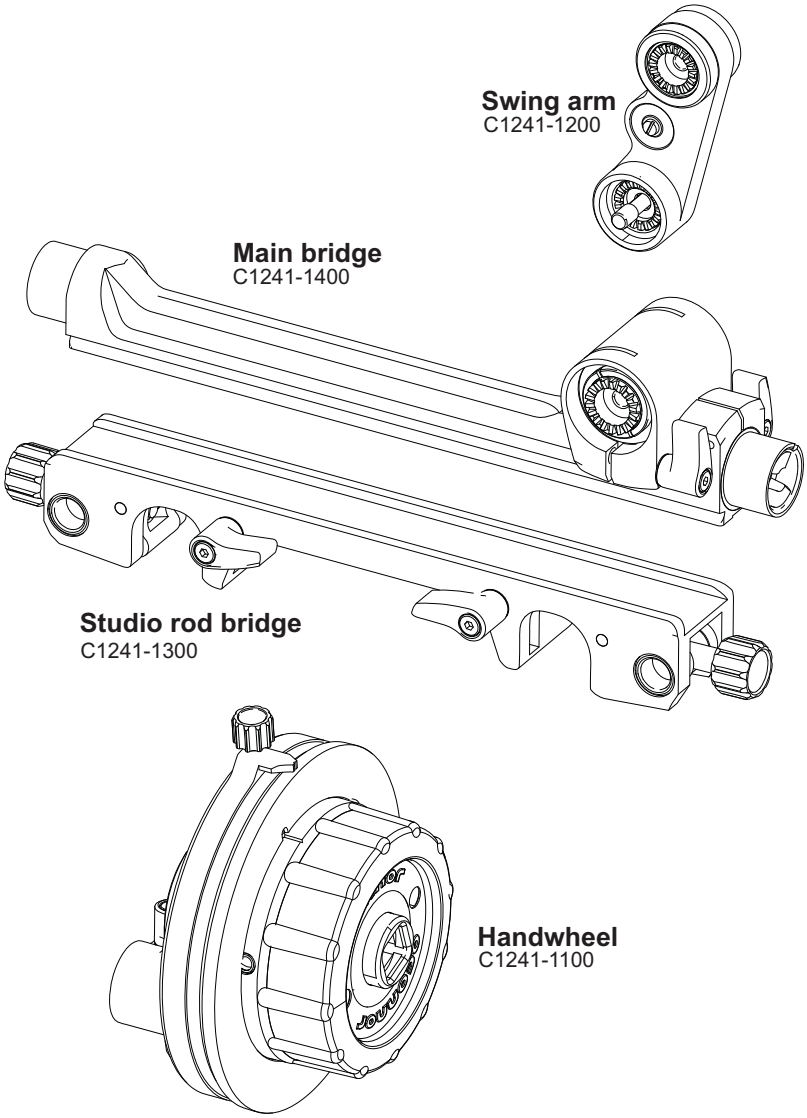
Swing arm
C1241-1200
Main bridge
C1241-1400
Studio rod bridge
C1241-1300
Handwheel
C1241-1100

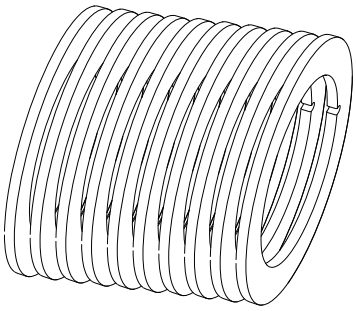

Set of 10 Marking Disks
C1240-1530

Foam insert for Storm Case iM2200
C1241-2621

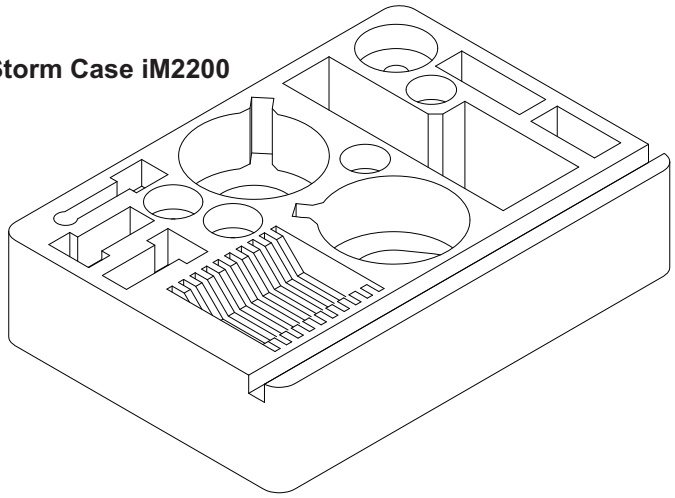

Drive Gears

43 tooth
C1241-1600

35 tooth
C1241-1700

50 tooth
C1241-1800

60 tooth
C1241-1900

Drive gears

Part No.	Drive Gear description	Lens
C1241-1600	Driver Gear 43 tooth 0.8M 6 mm face	Cine
C1241-1700	Driver Gear 35 tooth 0.8M 10 mm face	Cine
C1241-1900	Driver Gear 60 tooth 0.5M 7.5 mm face	Canon ENG focus
C1241-1800	Driver Gear 50 tooth 0.6M 7.5 mm face	Fujinon ENG focus

Assembly

1
Slide the studio rod bridge onto the main bridge.

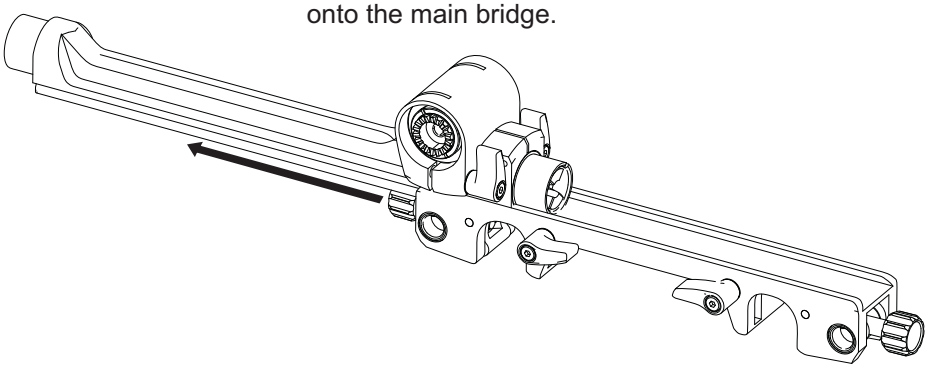

2
Secure the studio rod bridge using the two lock levers

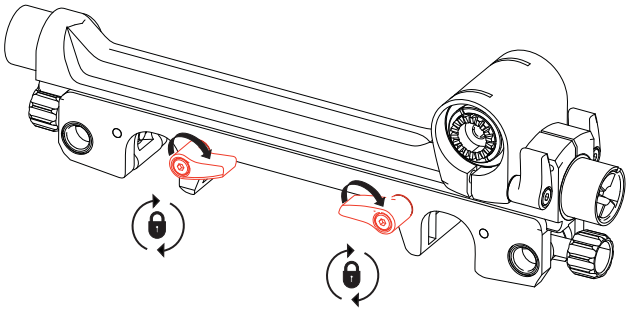

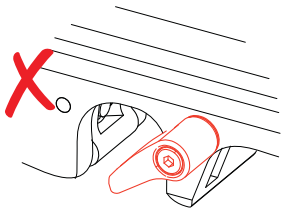

When locked, the lock lever must not obscure the path of the camera rod.

To reposition the lock levers:

a

Pull the lock lever towards you.

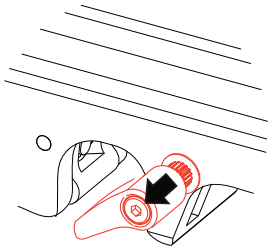

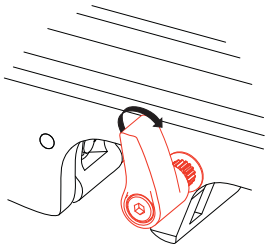

b

Rotate the lock lever to the correct position.

c

Push the lock lever to secure into position.

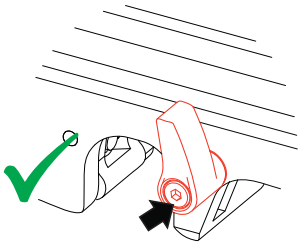

3

Ensure that the teeth on the swing arm and main bridge interlock. Firmly hold the top of the swing arm (where the drive gear fits) whilst tightening the knurled screw. The swing arm can be mounted on either side of the main bridge.

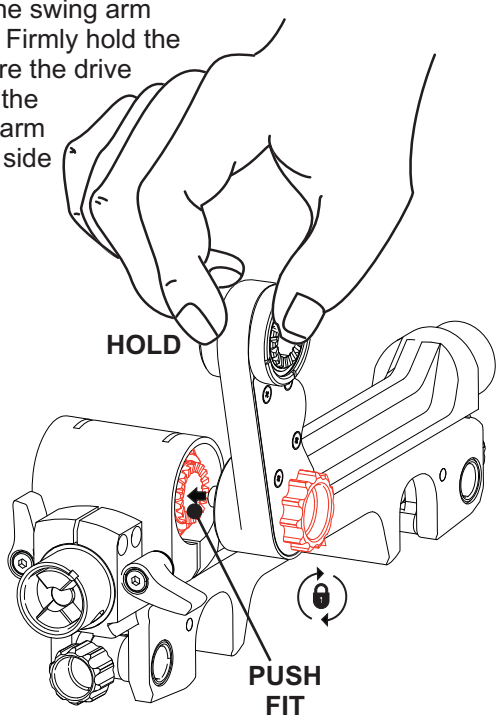

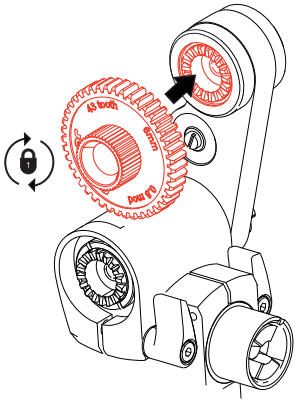

4

Select the correct gear for lens in use. Ensure that the teeth on the drive gear and swing arm interlock. Secure by tightening the knurled screw on the drive gear. The drive gear can be mounted on either side of the swing arm.

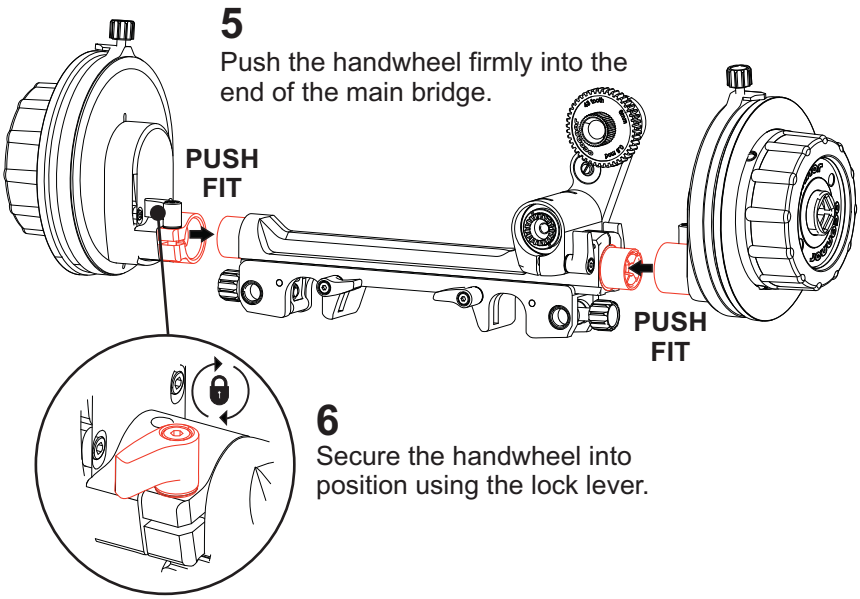

5
Push the handwheel firmly into the end of the main bridge.

6
Secure the handwheel into position using the lock lever.

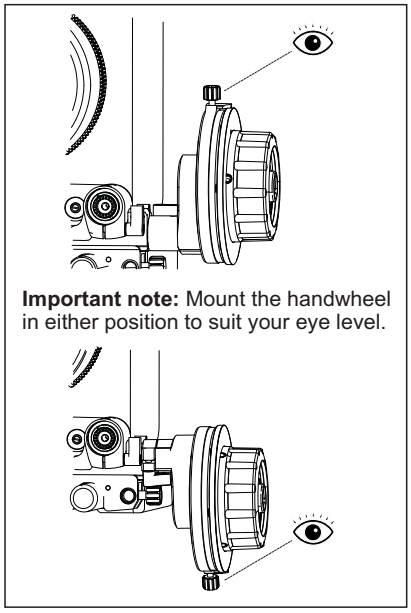

Important note: Mount the handwheel in either position to suit your eye level.

7

Place the Cine Follow Focus One onto the camera rods so that the drive gear is adjacent to the lens focus drive. Secure into position using the knurled screws at the end of the studio rod bridge.

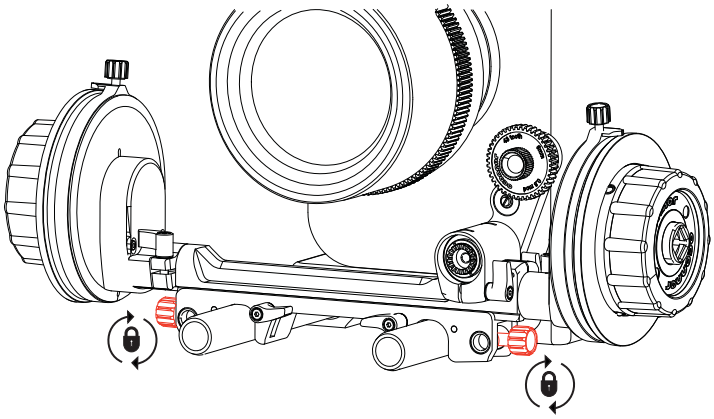

The Cine Follow Focus One can be mounted from camera rods suspended above the camera.

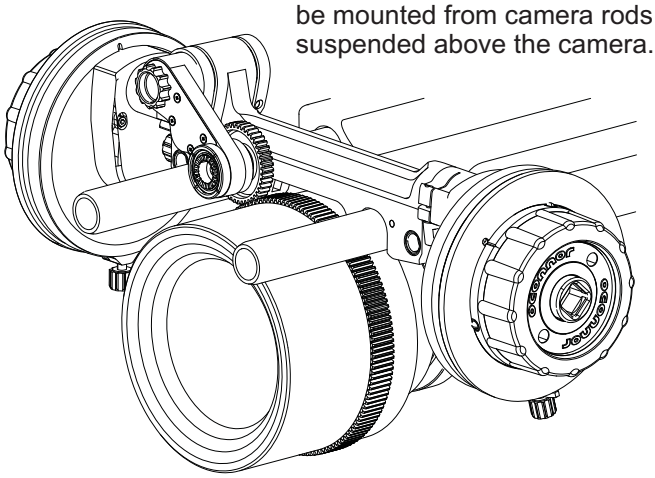

8

Loosen the lock lever securing the swing arm in position.

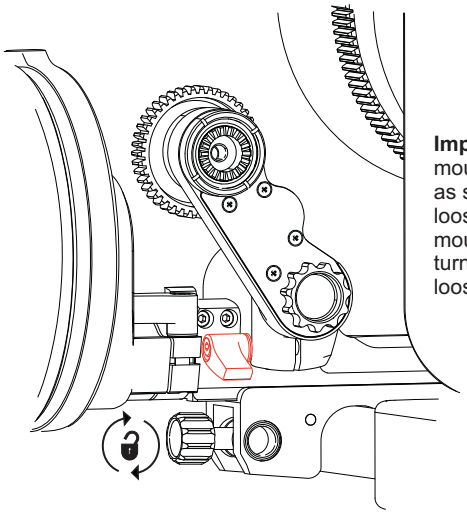

Important note: if the swing arm is mounted on the back of the main bridge, as shown, turn the lock lever clockwise to loosen the swing arm. If the swing arm is mounted on the front of the main bridge, turn the lock lever counter clockwise to loosen the swing arm.

9

Position the swing arm so that the drive gear engages with the lens focus drive. Secure the swing arm into position using the lock lever.

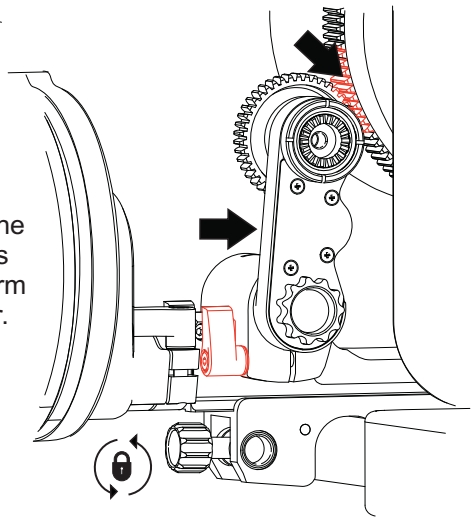

10

Turn the handwheel. Ensure that the drive gear engages and drives the lens focus drive.

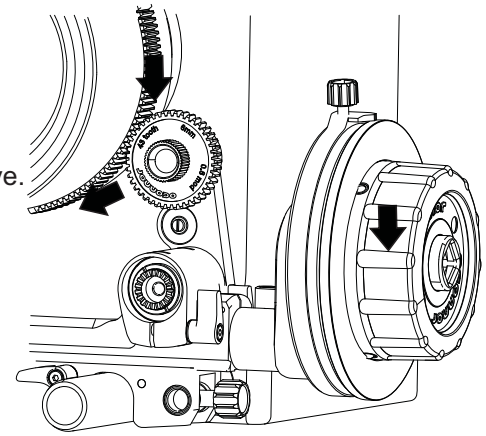

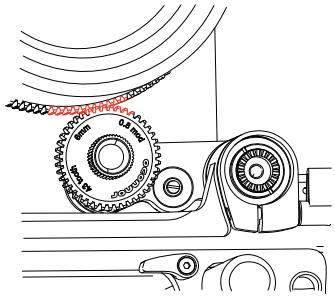

Note: The drive gear can be positioned under the lens or over the lens depending on your camera setup.

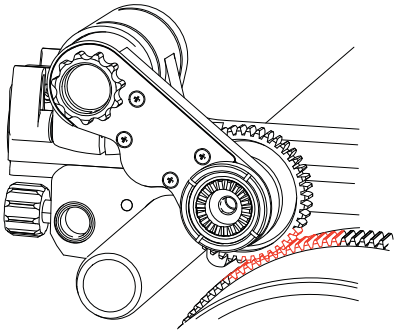

- Use a suitable marker pen, such as a Sharpie®, to mark the disk with the lens focal reference points.

- Always remove the marking disk before cleaning. Do not use solvents on the Cine Follow Focus One. Clean the marking disk following the instructions supplied with the marker pen.

To remove a marking disc:

a pull the marking disk off the handwheel.

To replace a marking disc:

a ensure that the cutout on the marking disk is aligned with the point on the handwheel.

b slide the marking disk over the handwheel and push into position, until it clicks.

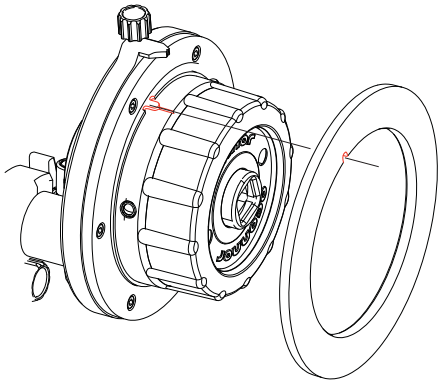

To move the witness mark:

1
Loosen the knurled screw on top of the witness mark.

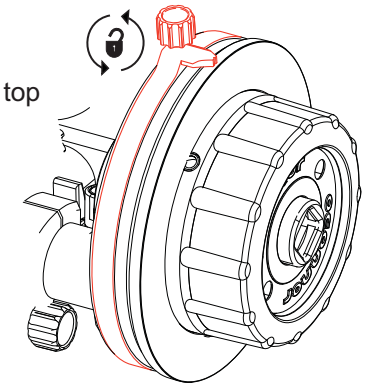

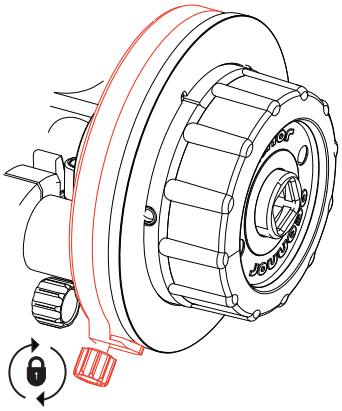

2
Rotate the witness mark to the focus point on the marking disk. Secure into position by tightening the knurled screw.

Dismounting

1

Loosen the lock lever on the swing arm to disengage the drive gear from the lens focus drive. Position the drive gear away from the lens and secure using the lock lever.

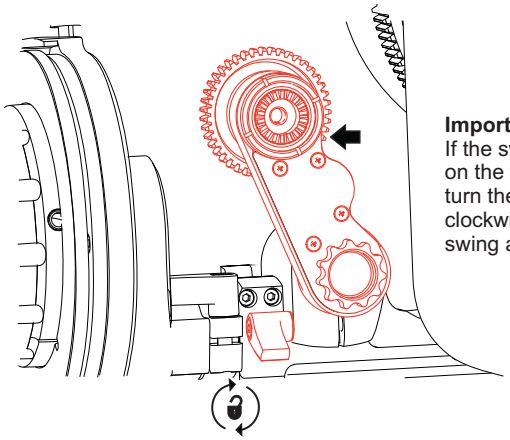

Important note:
If the swing arm is mounted on the front of the main bridge, turn the lock lever counter clockwise to loosen the swing arm.

2

Loosen the knurled screws at the end of the studio rod bridge to release the rod clamps.

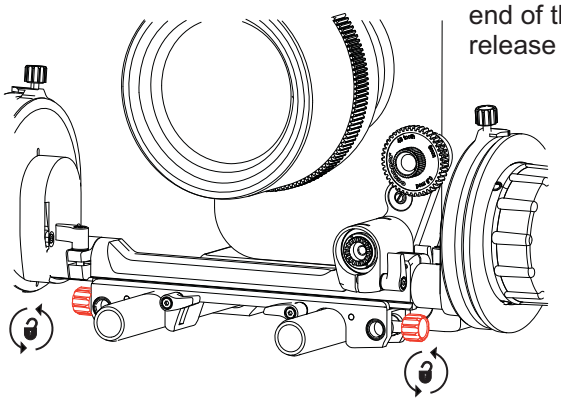

3

Lift the Cine Follow Focus One off the camera rods.

Storage

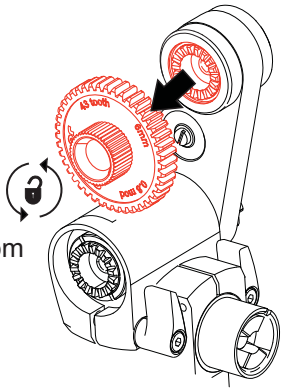

1
Remove the drive gear from the swing arm.

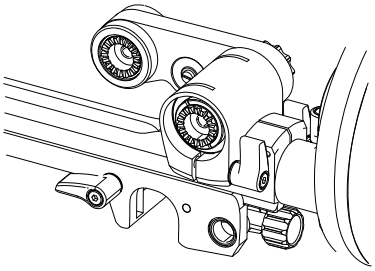

2
Loosen the lock lever securing the swing arm. Fold the swing arm down onto the main bridge.

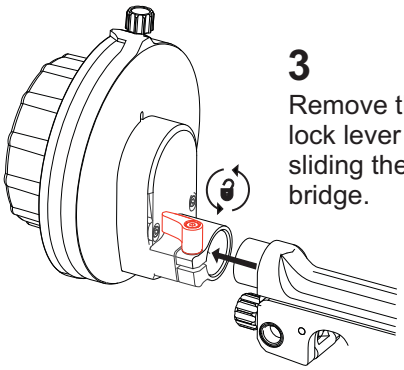

3
Remove the Handwheel(s) by loosening the lock lever at the back of the handwheel and sliding the handwheel free from the main bridge.

4
Carefully place the components into the foam insert provided.

⚠ To prevent damage, always store the Cine Follow Focus One in a solid case when not in use.

OConnor Offices

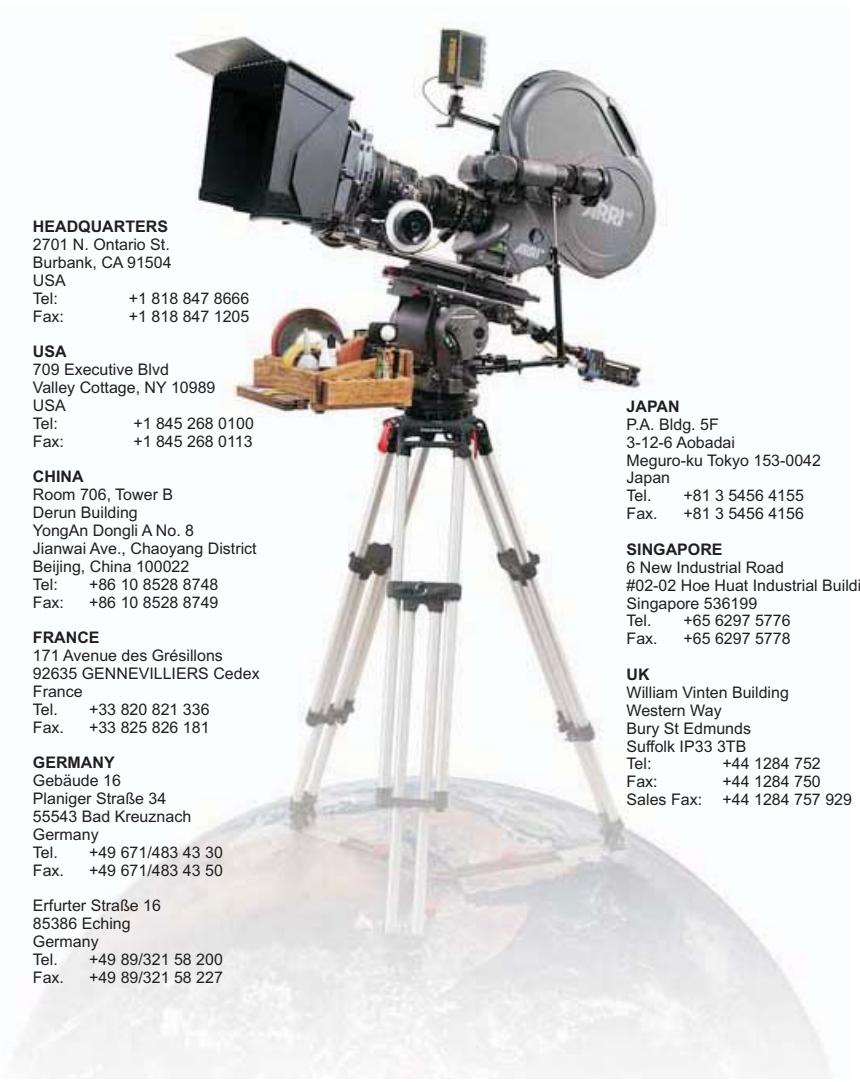

HEADQUARTERS
2701 N. Ontario St.
Burbank, CA 91504
USA
Tel: +1 818 847 8666
Fax: +1 818 847 1205

USA
709 Executive Blvd
Valley Cottage, NY 10989
USA
Tel: +1 845 268 0100
Fax: +1 845 268 0113

CHINA
Room 706, Tower B
Derun Building
YongAn Dongli A No. 8
Jianwai Ave., Chaoyang District
Beijing, China 100022
Tel: +86 10 8528 8748
Fax: +86 10 8528 8749

FRANCE
171 Avenue des Grésillons
92635 GENNEVILLIERS Cedex
France
Tel. +33 820 821 336
Fax. +33 825 826 181

GERMANY
Gebäude 16
Planiger Straße 34
55543 Bad Kreuznach
Germany
Tel. +49 671/483 43 30
Fax. +49 671/483 43 50

Erfurter Straße 16
85386 Eching
Germany
Tel. +49 89/321 58 200
Fax. +49 89/321 58 227

JAPAN
P.A. Bldg. 5F
3-12-6 Aobadai
Meguro-ku Tokyo 153-0042
Japan
Tel. +81 3 5456 4155
Fax. +81 3 5456 4156

SINGAPORE
6 New Industrial Road
#02-02 Hoe Huat Industrial Building
Singapore 536199
Tel. +65 6297 5776
Fax. +65 6297 5778

UK
William Vinten Building
Western Way
Bury St Edmunds
Suffolk IP33 3TB
Tel: +44 1284 752
Fax: +44 1284 750
Sales Fax: +44 1284 757 929

www.ocon.com - sales@ocon.com