Hocus Focus

Wireless Remote Follow Focus System

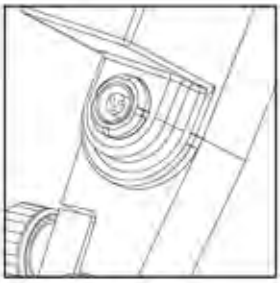

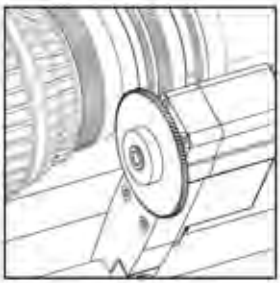

Instruction Manual

HF/1

WARNING

- Do not over tighten any rod clamps or tighten with no rod inserted.
- Do not press on the membrane panel lights (frequency and limit)
- Do not operate in wet environments.
- When not in use for long periods of time, remove batteries.
- For best performance, do not use rechargeable batteries.
- Do not attempt to use with high gain antennas.
- Do not attempt to open any of the units unless instructed to do so by Hocus Products, doing so could void your warranty.
- To clean the units, wipe with a damp cloth.
- Always transport in a rigid bodied case.
- Do not pierce or dispose of batteries in fire.
- Do not dispose of units in household waste.

Cinema Lenses

Please note that the Hocus Focus is intended for SLR and broadcast lenses only. The motor does not have the power or the rotation necessary to control heavy and stiff cinema lenses.

Using the Hocus Focus motor with cinema lenses could cause noisy operation, and could damage the gearing inside the motor.

RoHS

This product conforms with Restriction of Hazardous Substances Directive
This product meets EU consumer safety, health and environmental requirements.

Package Contents

Hocus Focus Transmitter Unit

Hocus Focus Receiver Unit

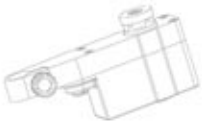

Hocus Focus Motor Unit

Hocus Focus Marking Rings (1 Included)

2x Antenna

19mm Adapter (optional)

Interchangeable Gear(s)

Lemo Cable (60cm)

The Transmitter Unit

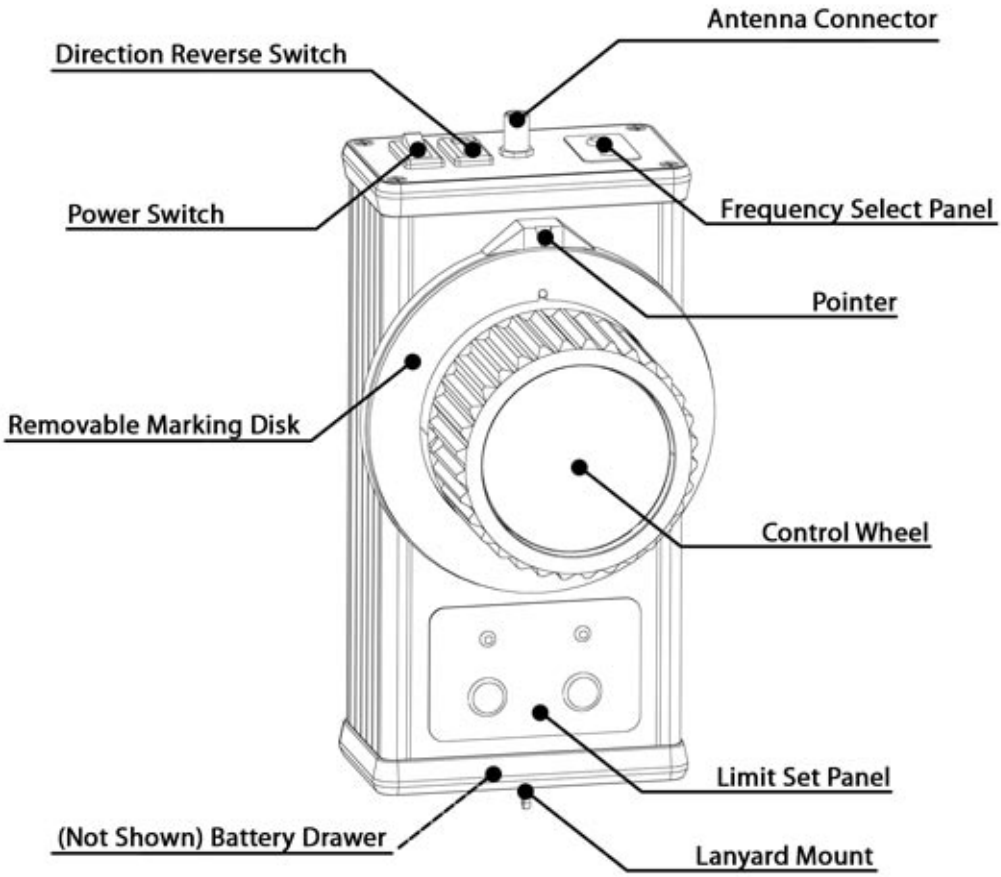

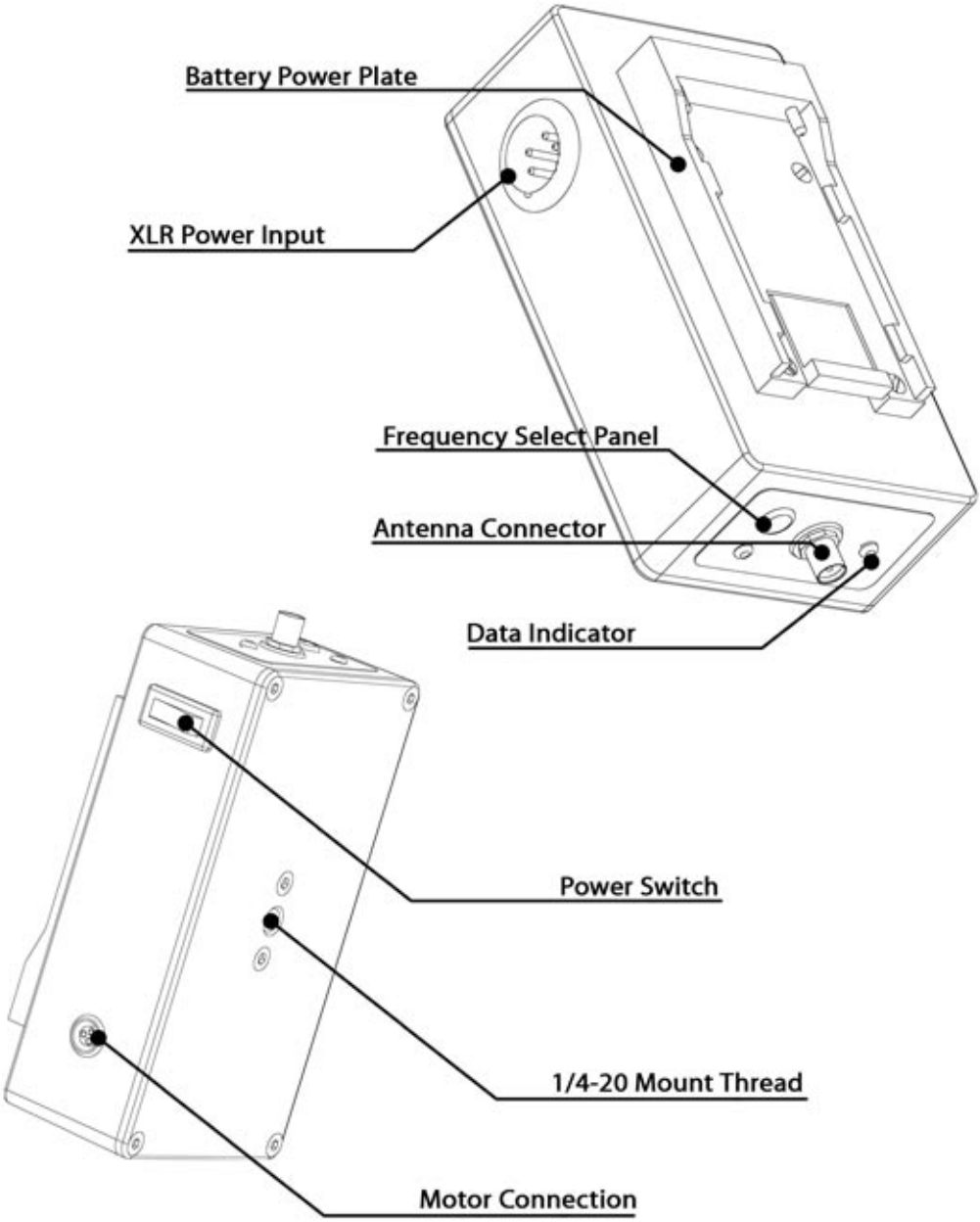
Battery Power Plate
XLR Power Input
Frequency Select Panel
Antenna Connector
Data Indicator
Power Switch
1/4-20 Mount Thread
Motor Connection

The Motor Unit and Gears

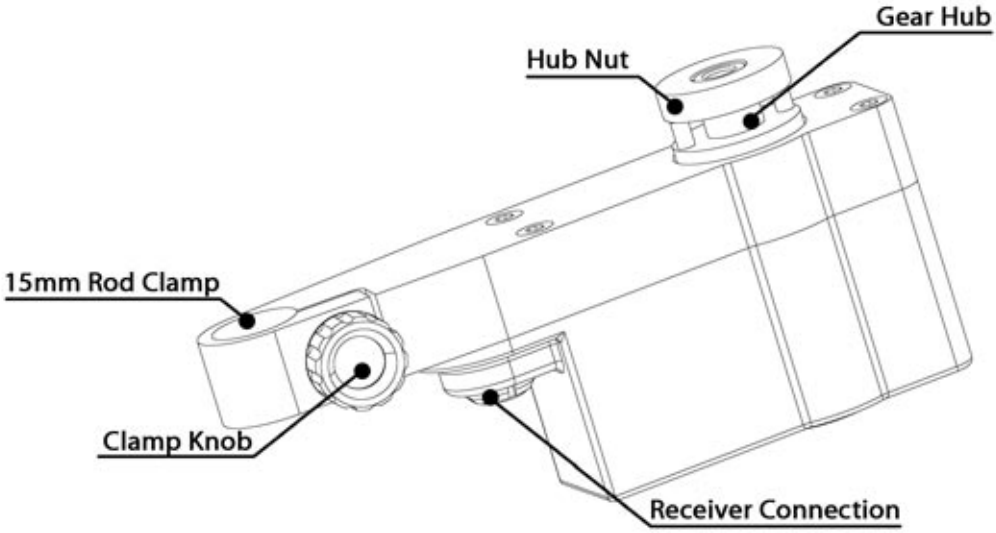

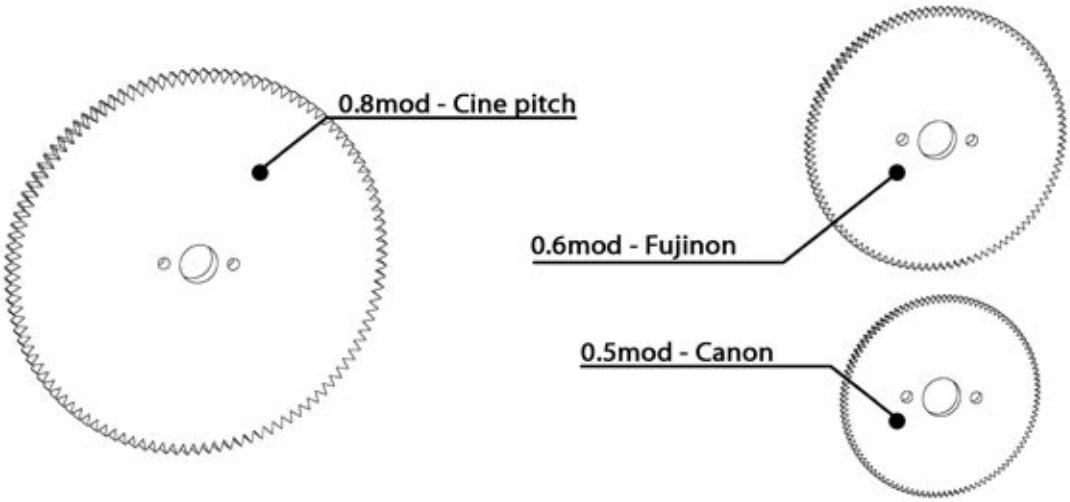

This is a guide to get you started with the Hocus Focus as quickly as possible. We recommend that you read through the rest of this guide for more detailed instructions on operating the Hocus Focus.

- Power the transmitter with one 9v battery.

- Power the receiver with 4 pin XLR input or Sony NP mount camcorder battery

- To set frequency, press and hold FREQ button until the light starts to cycle through colours. Stop on preferred colour. Repeat for each unit, matching the colours. Verify DATA light is solid green.

- Set up the system off the camera to verify operation

- Install the correct gear to the motor and slide motor onto the camera rod.

- Position the motor (but do not engage gear teeth yet)

- Route cable to the receiver, and plug in, aligning the red dots. The angled end is for the receiver.

  - Turn on the transmitter and set the limits:
  - If either of the two limits are already set (green lights) erase by pressing and holding the appropriate button until the light shows red
  - Set the lens and the motor to their centre positions
  - Engage the drive gear to the lens and tighten the clamp. Do not mesh the teeth too tightly, a bit of play is necessary for smooth operation
  - Turn the wheel all the way to one side and stop slowly on the lens mark
  - Press and hold the appropriate limit button until it lights green. (See diagram on p11)
  - Turn the wheel the opposite way and repeat this process for the other stop
  - Turn the wheel from end to end to check that the limits are setup correctly. If the motor vibrates or hums loudly at either end of the movement range, erase and reset this stop
  - If the control wheel rotates the wrong way, reverse it using the direction switch on the transmitter

Please read the rest of this manual for more in depth instructions in the set up and operation of the Hocus Focus system.

Gearing SLR lenses

SLR lenses do not have gears built into them so a gear ring must be fitted before the Hocus Focus can be used. Gear rings are available from many manufacturers such as Redrock Micro, Shoot35 and Zacuto. The Zacuto Zip gears are ideal as the design is compact and allows for the fewest number of teeth possible which helps maximise available lens throw, however they are not easily changed between lenses. The Redrock Micro gear rings are suitable for changing rapidly between different lenses.

Care must be taken to ensure that the lens ring is centered with the lens, or the rotation can push the motor away from the lens and cause the teeth to skip. You should also make sure that the ring is secured and cannot slip round on the lens which will cause inaccuracies with your focus pulling.

If the lens ring has a clamping section like the Zacuto and Redrock rings, make sure this is positioned so it does not run into the drive gear whilst it is turning

All lens rings for 35mm SLR lenses are 0.8mod Cinepitch.

Marking rings

The Hocus Focus features interchangeable acrylic marking rings. These use three small magnets to stick to the transmitter. These rings are not double sided and will only stick to the knob when the magnets are facing the black disk.

The notch in the ring must be aligned with the peg on the knob disk for the ring to snap to the front of the disk.

The receiver has a standard 1/4-20 thread in the bottom for mounting to the camera. There are many third party mounting products available, but for versatility and durability, we recommend Zacuto. Below is a diagram showing an ideally mounted receiver using some of Zacuto's products.

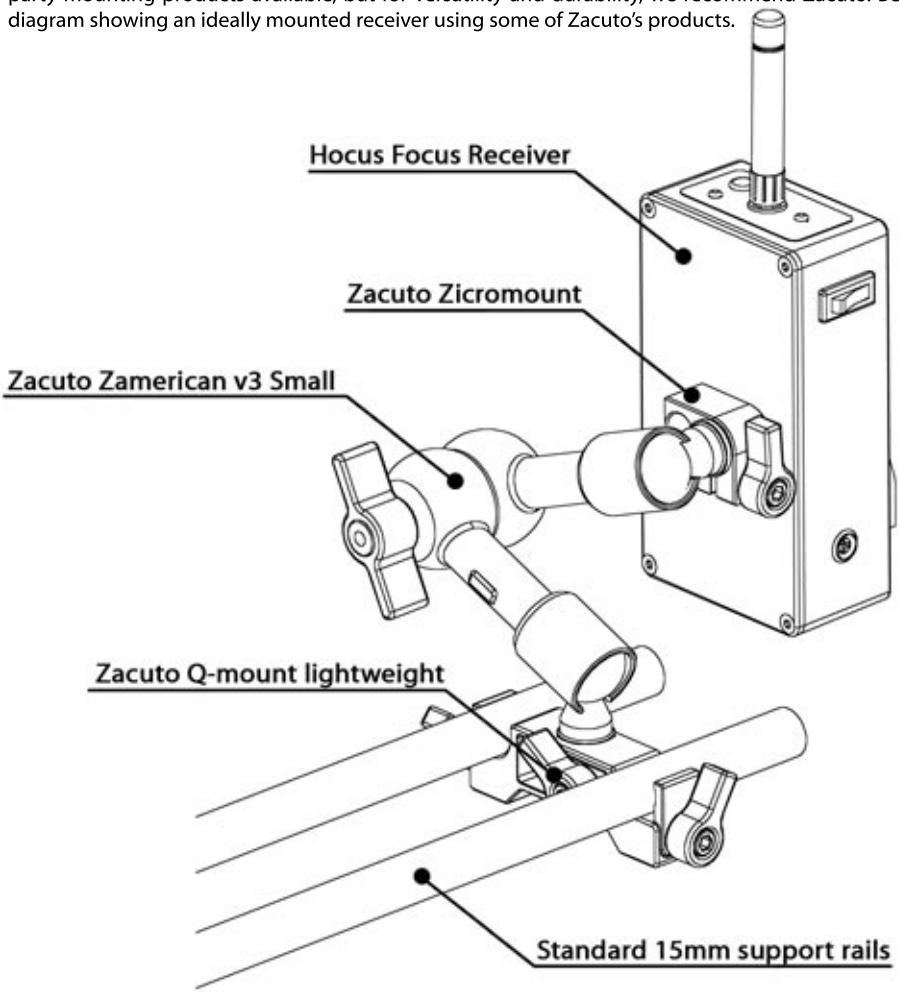

Please see www.Zacuto.com for more information on Zacuto products.

Mounting The Motor Unit

The motor is designed to mount directly onto 15mm support rods, or 19mm rods via the optional 19mm adapter.

If you have a manual follow focus on the rails, it is recommended that you remove this before mounting the Hocus Focus motor.

First install the correct drive gear on the motor unit for your lens. These will be 0.8mod for cine lenses, 0.6mod for Fujinon lenses and 0.5mod for Canon lenses. Unscrew the red hub nut, and seat the gear down on the hub, aligning the two holes with the pins on the hub. Secure by replacing the hub nut.

Slide the motor onto the rod, orientating the tightening knob so it is accessible. Align the gear with the teeth on the lens ring, but do not engage the gears yet. Tighten the clamp knob to hold the motor in position.

Connect the motor to the receiver using the supplied Lemo cable. Care should be taken to align the red dots on the connector with the corresponding dot on the socket. The angled end of the cable is for the receiver and will not plug into the motor.

Route the cable so it is secure and will not upset normal operation or balance of the camera. Ensure that no cables or loose parts can be pulled between the drive gear and the lens.

Do not turn the system on with the drive gear engaged to the lens.

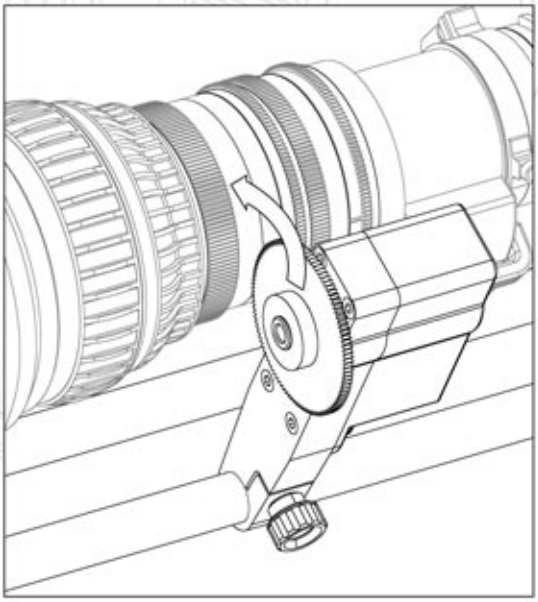

Setting the frequency

The Hocus Focus uses a colour coded frequency selection system. Ensure both antennas are connected before you start. To set the frequency, the colour shown on top of the transmitter and receiver units must match. To change, press and hold the FREQ button. After a few seconds, the colours will start to cycle. When the light shows the desired colour, release the button and the unit will hold that frequency. Repeat this process for both transmitter and receiver units.

The DATA light on the receiver illuminating green verifies a good connection. The light flickering between red and green indicates 'dirt' or interference on the channel. When this happens, move to a new channel using the instructions above.

Whilst there are 10 frequencies available, these do cross over. This is to ensure there is maximum space available to avoid any interference. More than one Hocus Focus can be operated together, we recommend no more than four sets. Some experimentation with different frequencies may be required to find four clean frequencies.

Powering the receiver

The Hocus Focus receiver runs on 12v DC. For maximum torque and speed, the 4pin XLR power input should always be used. Power from a V-Lock or Anton Bauer battery is ideal. If this is not possible a Sony NP battery (for Z1 and other cameras) can also be used on the included plate. Do not use both the XLR and the battery plate at the same time. When the battery is running low, the frequency light will flash slowly.

Powering the transmitter

The Hocus Focus transmitter runs on a standard 9v (PP3) battery. About 10 hours of operation can be expected from each new battery. To install the battery, remove the drawer In the bottom of the transmitter unit and install the new battery. Observe the notches on the drawer, and line up with the appropriate terminals on the battery. The battery can only go in the drawer one way to ensure polarity. Reinsert the drawer and it will click into place.

When the battery is running low, the frequency light will flash slowly.

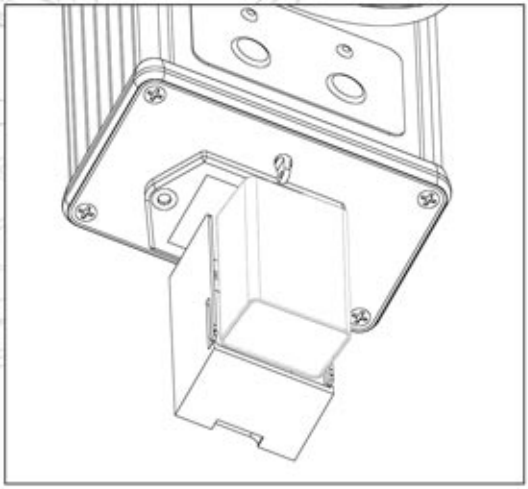

Setting The Limits

The Hocus Focus has two limits which can be set to prevent the motor over turning and damaging the lens or motor. They are also useful to deal with the infinitely rotating focus ring on some of the newer SLR lenses.

To set the limits, first ensure that the motor and lens are disengaged before switching the receiver on. The motor should be lined up and the correct drive gear installed before doing this. Switch on the receiver and transmitter and verify a connection by turning the motor with the control wheel.

If either of the two limits are already set (green light) then erase by pressing and holding the corresponding button which will flash and then go red.

Turn both the lens and the control wheel to their centre position. On the Hocus Focus transmitter, this is when the marking disk keying stud is in the bottom position.
Engage the lens and drive gear. It is important to leave a small amount between the two gears to ensure smooth operation. Tighten up the knob on the motor to securely hold the motor to the lens.

Now carefully rotate the wheel in either direction. It is not important which limit you set first. Constantly observe the lens as you rotate the wheel. Carefully approach the last mark on the lens and stop on the mark. If the motor is humming or chattering, wind back a little bit until it stops.
Set the limit by pressing the appropriate limit button. The button to use is the one you have turned the wheel towards. (See diagram on the opposite page)

Wind the wheel back towards the other end of the lens and repeat this process.

Test the range of motion by carefully moving the lens through its range of motion, checking there is no humming or chattering at either end.

If the control wheel operates in the wrong direction, reverse this by flicking the direction switch on top of the transmitter unit.

If the motor will not turn the lens the whole way please refer to page 13.

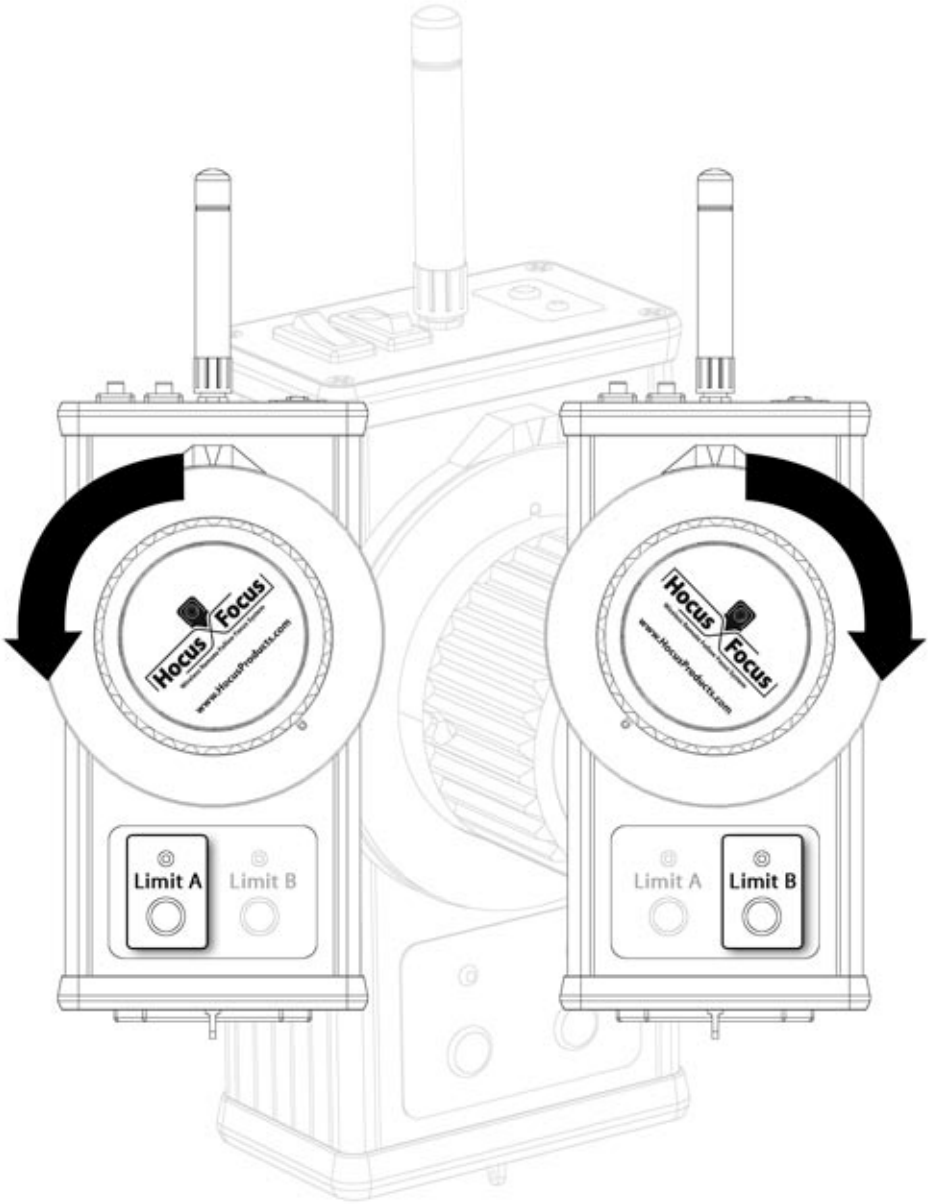
Hocus Focus
www.HocusProducts.com
Limit A
Limit B
Hocus Focus
www.HocusProducts.com
Limit A
Limit B

Long Throw Lenses

Some long focal length lenses have a longer lens throw (turn of the lens barrel from infinity to close focus). In some cases, this can be too much travel for the Hocus Focus motor to turn all the way.

In these situations, there are several things you can do to help achieve full lens barrel movement. If using an SLR lens, the lens gears you are using will have a big impact on the rotation you can achieve. The fewer the teeth on the lens, the better. The Zacuto Zip gears are ideal as they hug the lens barrel tightly so the number of teeth is minimal.

A special drive gear for the motor is also available which has 120 teeth, instead of the standard 100 teeth. This will also increase the available throw on the lens barrel. Please contact us to purchase.

If you decide that full turn on the lens is not necessary, it is possible to pull focus using just part of the focus movement. Based on the individual shot you are working on, decide which end of the focus scale is more important, infinity or close. In most cases, this will be infinity.

To set up the limits with maximum travel available, first erase both limits. With the gears disengaged, turn the lens to your preferred end and rotate the motor using the transmitter to the same end. Engage the lens to the drive gear. Wind the lens back the other way to check that the motor does not outrun the lens. If it does, set the limit using the appropriate button in the normal way. It is not necessary to have both limits set when setting up the motor limits in this way.

For more advice on dealing with long throw lenses, please contact us.

Most common problems are easily solved. If the troubleshooting information does not resolve the issue please contact us immediately. Do not attempt to find the fault or repair the unit yourself as this will void your warranty.

Transmitter will not turn on
- Check battery charge and polarity

Receiver will not turn on
- Check power source, power and polarity. Do not use both XLR power and battery plate at the same time

Motor does not move when the wheel is turned
- Check transmitter and receiver frequencies match (page 11)
- Verify data light is green
- Check motor cable
- Both limits could be set at the same position (this will stop the motor operating) erase by pressing and hold both limit set buttons until they light red.

Frequency colour light is not visible
- In bright light, the frequency light can be hard to see. Shading the light with your hand will help you see the colour

Limited or no radio range
- Ensure antennas are connected
- Check data light is green
- Move to a different frequency colour

Data light is flickering or showing red
- Check transmitter and receiver frequencies match (see page 11)
- Ensure antennas are connected
- Move to a different frequency colour

Motor hums or jerks at the end of its motor movement
- Reset appropriate limit stop

No repeatability on infinitely turning focus rings
- Infinitely turning focus rings found on modern DSLR lenses can lose their repeatability. Make sure that when the motor stops turning at the end of the wheel motion, it does not move the ring past the stop.
- Reset the limits

Technical Specifications

Frequency: 433-434mhz (US 900mhz)
Transmitter power: 10mW
Range: 150 metres aprox, (50 metres in built up area)
Compliant to R&TTE directive; EN300-220-3, 301-489-3

Warranty

All products are covered for one calendar year from date of receiving the goods including labour and parts. After one calendar year we will continue to repair any faults at the full cost to the customer.

Please note we will not cover any shipping costs for returning the product to us. If any VAT or import duties are applied to the return and repair we will also charge these costs to the customer and will not ship back any product until payment has been received in full.

We will attempt to provide support via email or phone first before requesting the return of a product and we will only accept the product back if we believe it needs to be repaired.

When shipping any product back for Return and Repair please only send back the parts that we have requested marking the product clearly on the box and paperwork as Return and Repair.

Under no circumstances should you attempt to repair any product yourself unless you have been instructed to do so by us first. Any attempt to repair products without first contacting us for advice will result in the void of your Warranty.

For further information please read our Terms & Conditions www.HocusProducts.com

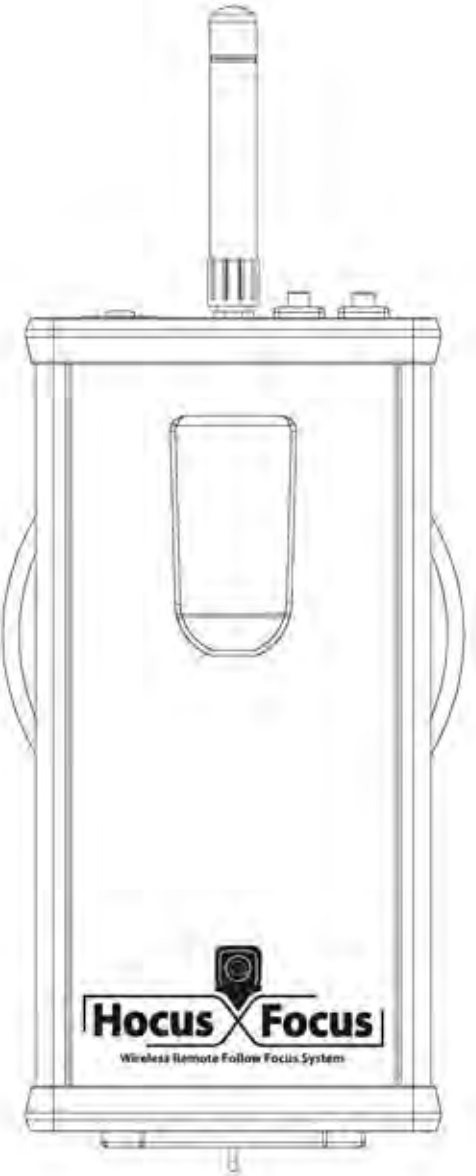

RoHS

www.hocusproducts.co.uk

This product conforms with Restriction of Hazardous Substances Directive

This product meets EU consumer safety, health and environmental requirements.